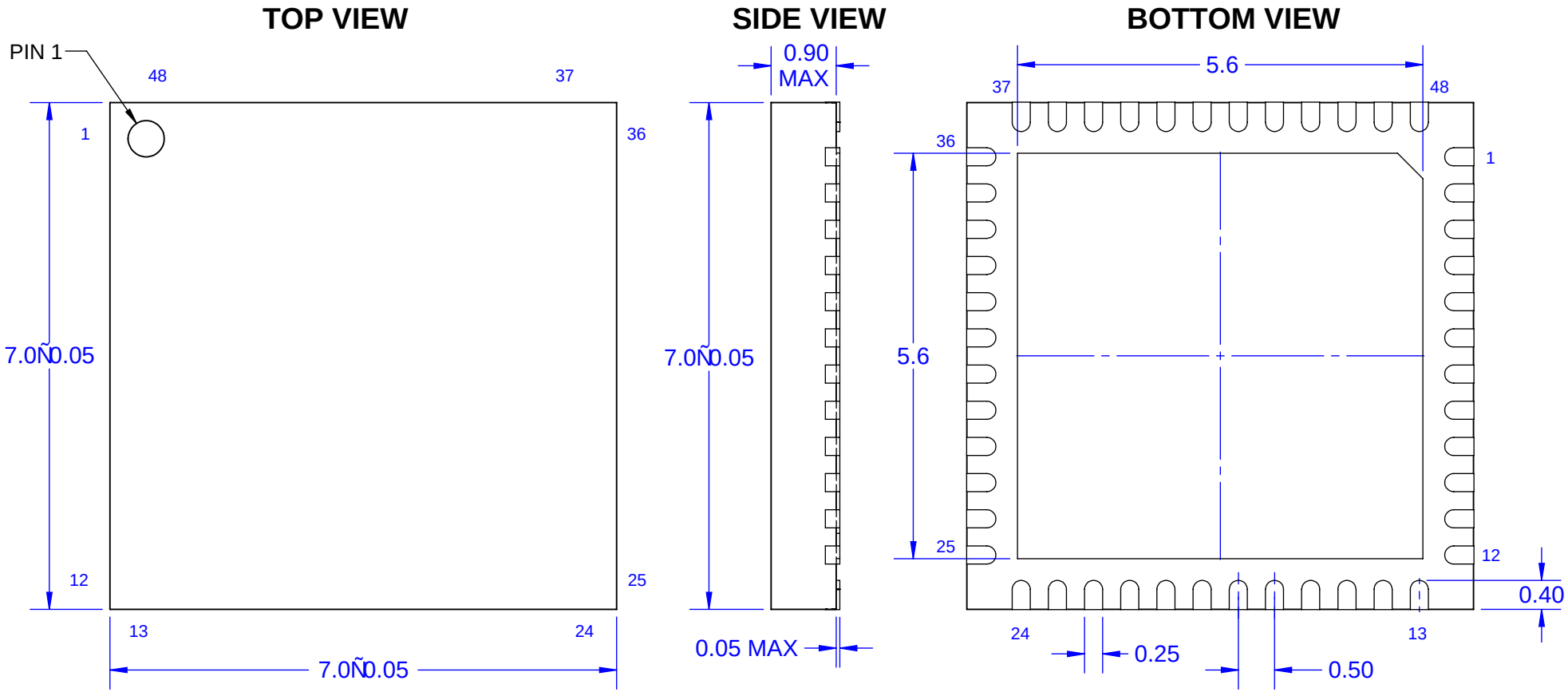

MODEL

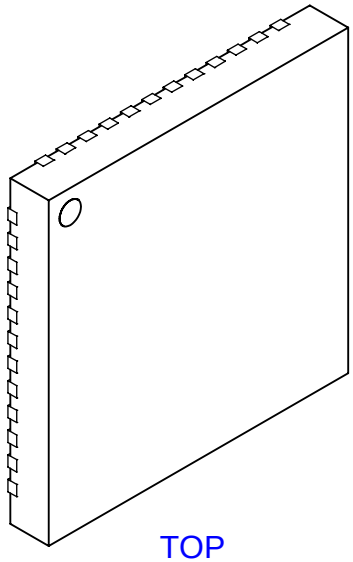

TOP

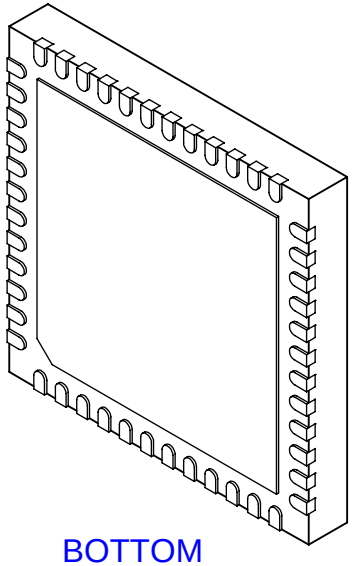

BOTTOM

Notes: (Unless Otherwise Specified).
1) BODY: PLASTIC, SEMICONDUCTOR GRADE.
2) LEAD FRAME: COPPER, C-194 F/H.
3) LEAD FRAME PLATING: Ni Pd Au.
4) FRAME THICKNESS: 0.203mm.
5) DIE PAD: 5.6 x 5.6mm EXPOSED BOTTOM.
6) JEDEC OUTLINE: MO-220.
7) DIMENSIONS mm.

APPROVALS		DATE	DRAWN TopLine®			
DRAWN	T. Au	01/07/2018				
ENG	M. Hart	01/07/2018	TITLE	48-LEAD 7mm P0.5mm QFN DAISY CHAIN		
MFG						
QA			SCALE	SIZE	DRAWING NO.	REV
CUST			15:1	A	454840	A
REVISED			DO NOT SCALE DRAWING			SHEET 1 OF 5

PAD PATTERN

TOP VIEW

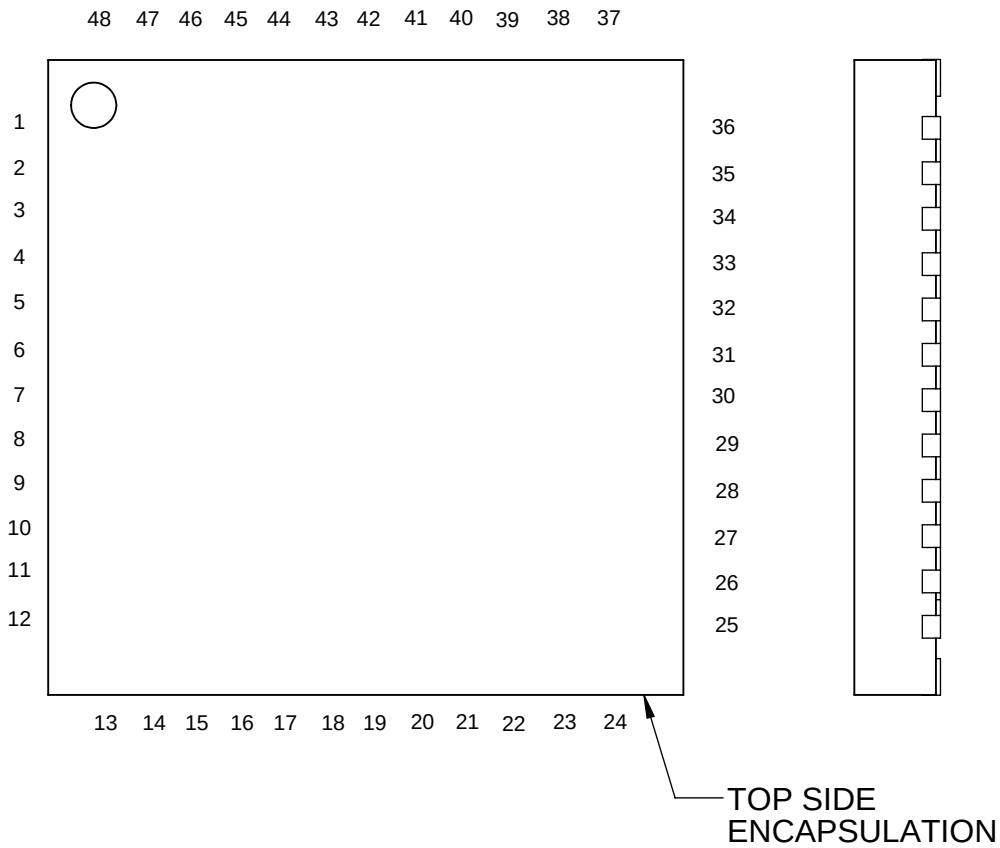

SIDE VIEW

BOTTOM VIEW

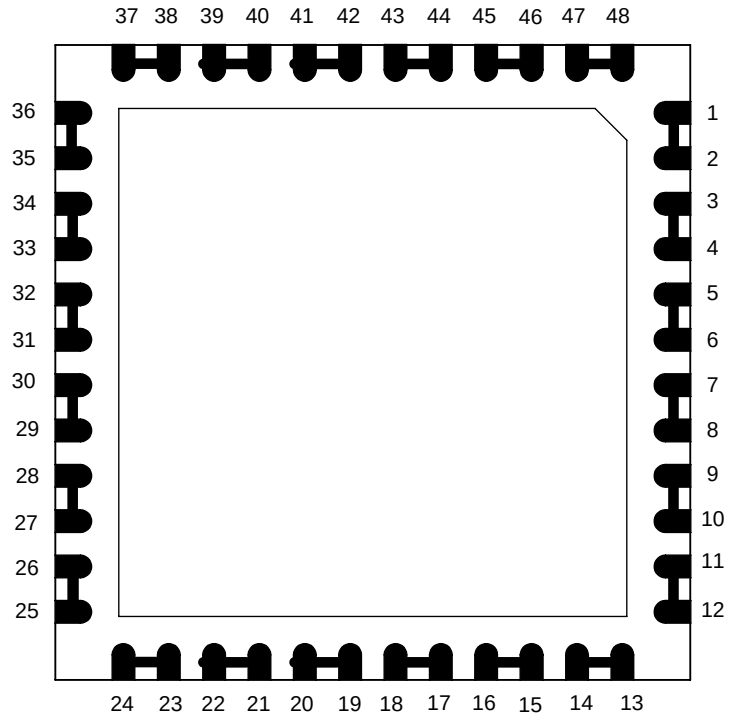

NOTE:
1. PACKAGE DAISY CHAIN BY WIRE BONDING TO INTERNAL BOND PADS

TopLine®			
TITLE	48-LEAD 7mm P0.5mm QFN DAISY CHAIN		
SCALE 16:1	SIZE A	DRAWING NO. 454840	REV A
DO NOT SCALE DRAWING		SHEET 2 OF 5	

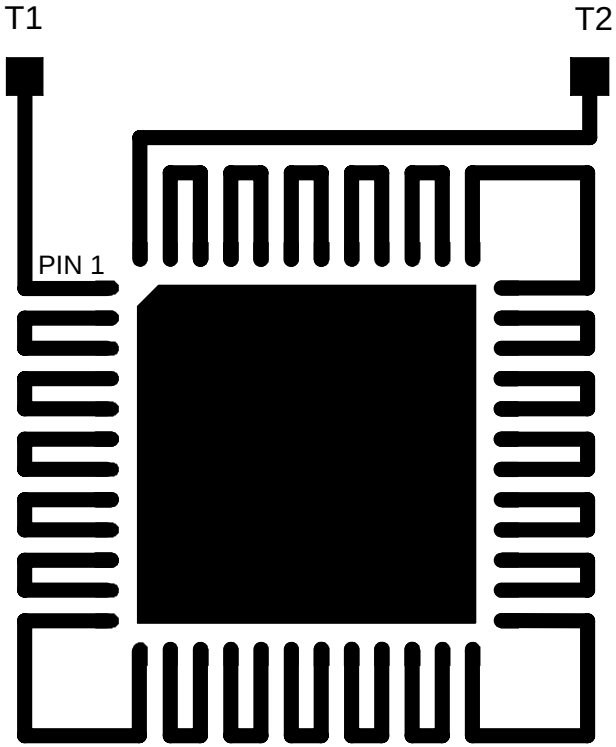

RECOMMENDED
PCB PADS

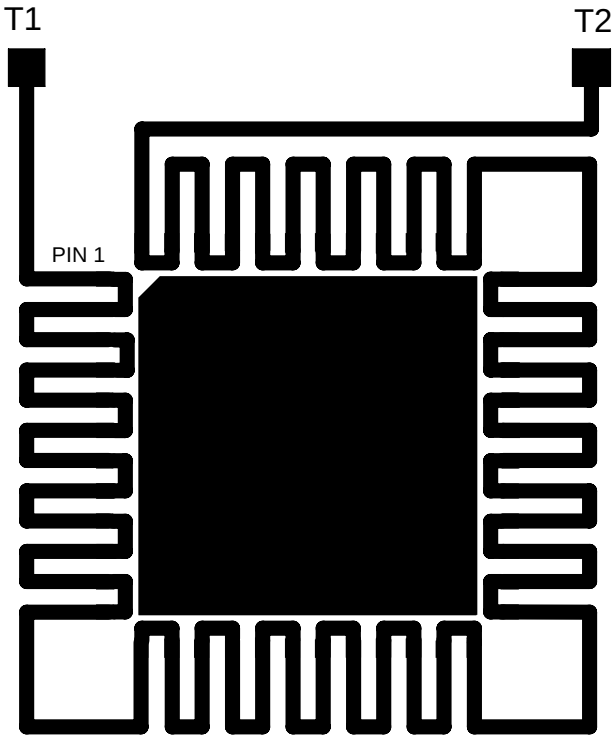

AFTER MOUNTING
ON PCB

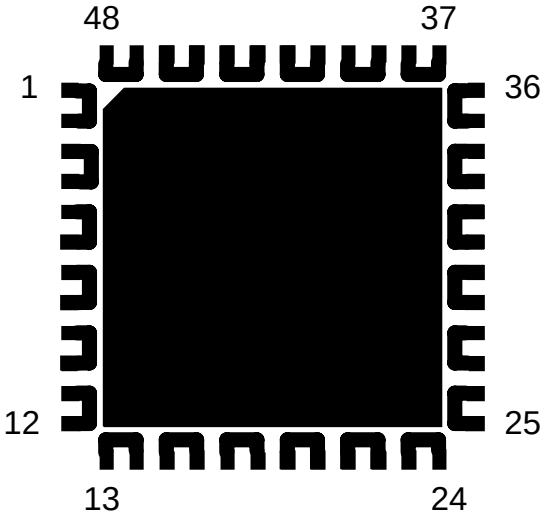

QFN

DAISY CHAIN NET LIST			
PIN	PIN	PIN	PIN
1	13	25	37
2	14	26	38
3	15	27	39
4	16	28	40
5	17	29	41
6	18	30	42
7	19	31	43
8	20	32	44
9	21	33	45
10	22	34	46
11	23	35	47
12	24	36	48

TopLine®

TITLE	48-LEAD 7mm P0.5mm QFN DAISY CHAIN		
SCALE 10:1	SIZE A	DRAWING NO. 454840	REV A
DO NOT SCALE DRAWING		SHEET 3 OF 5	

PC BOARD LAYOUT
DIMENSIONS IN MM
VIEW FROM TOP

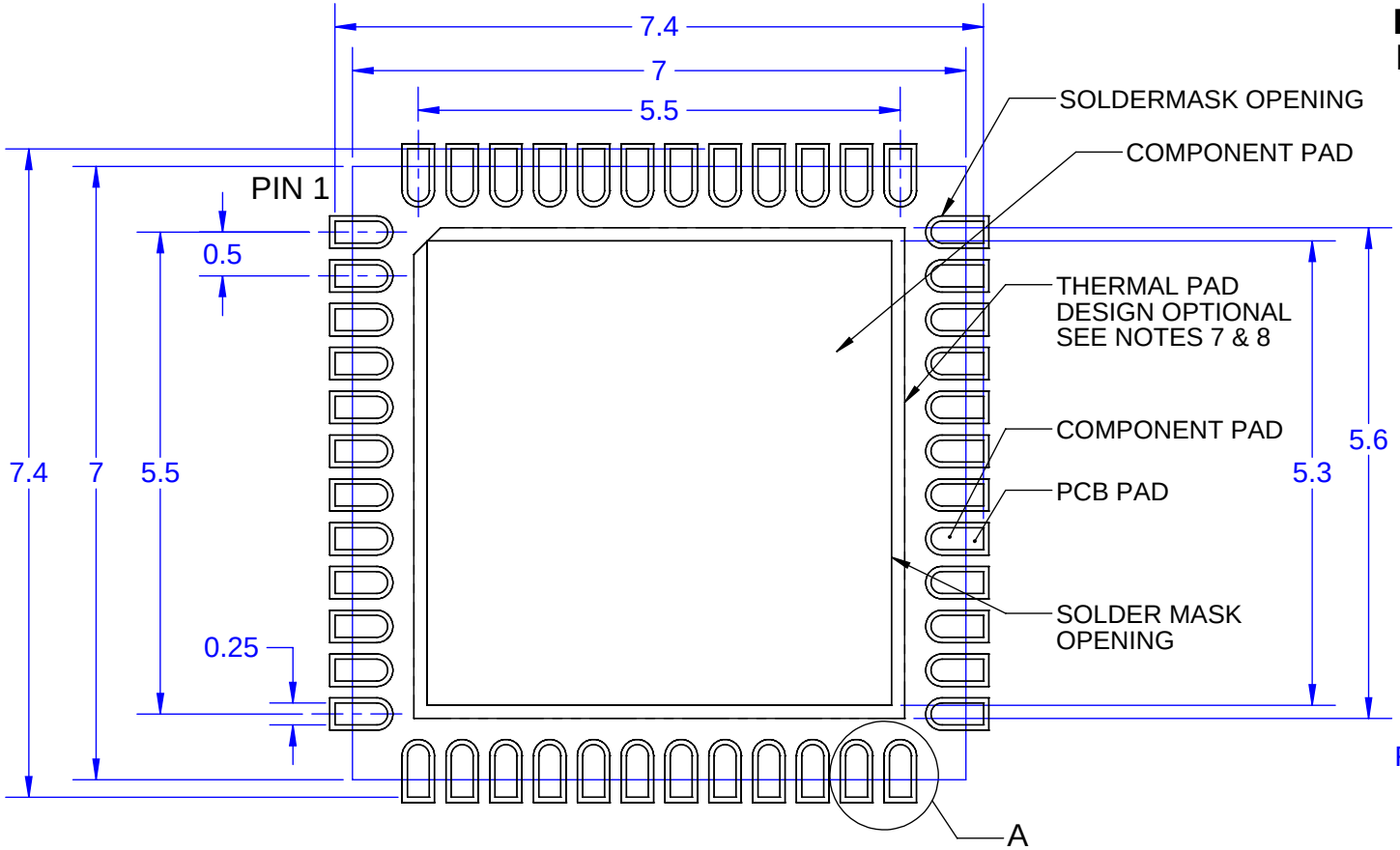

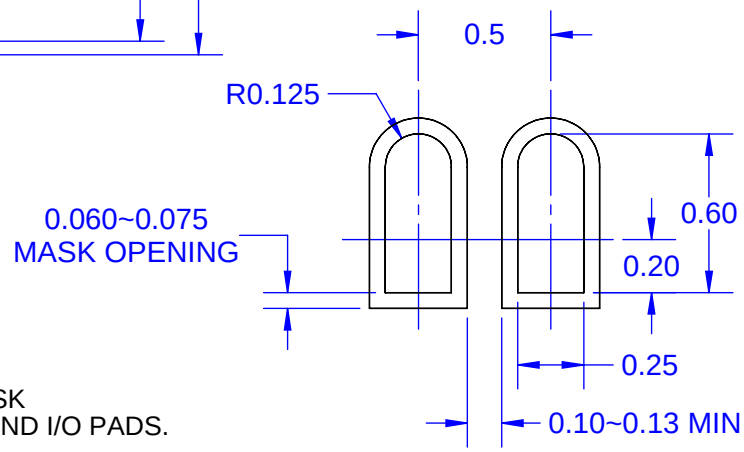

DETAIL A
SCALE 35 : 1

Notes: (Unless Otherwise Specified).

1) DIMENSIONS ARE PRESENTED ONLY AS A GUIDELINE.
   DESIGNERS SHOULD USE THEIR OWN KNOWLEDGE BASE WHEN DESIGNING THE PCB.
2) SURROUND EACH SIDE OF I/O PERIMETER PADS WITH 0.060~0.075 mm (NSMD) SOLDER MASK
   OPENING (2.4~3.0mils) OPTIONALLY OK TO USE RECTANGLE (NSMD) MASK OPENING AROUND I/O PADS.
3) ROUNDED PCB LAND PADS REDUCE SOLDER BRIDGING. PAD CHAMFER ANGLE MAY VARY.
4) PCB LANDS SHOULD BE 0.2mm LONGER THAN THE PACKAGE I/O PADS.
5) THE WIDTH OF PERIMETER PCB PADS SHOULD MATCH (1:1) THE WIDTH OF THE PACKAGE PADS.
6) REFER TO INDUSTRY REFERENCES SUCH AS IPC-SM-782 FOR PCB LAND PATTERN DESIGN.
7) THERMAL GROUND PADS MAY BE CHANGED TO SUITE REQUIREMENTS OF THE DESIGNER.
   A) MAKE COPPER THERMAL PAD AS LARGE AS POSSIBLE.
   B) DRILL MULTIPLE THERMAL VIAS 0.25~0.33mm DIAMETER USING 0.8~1.2mm PITCH GRID.
   C) PLATE THERMAL VIA BARRELS WITH 1-OUNCE COPPER (18Õm).
   D) TENT (COVER) THERMAL VIAS WITH SOLDER MASK 0.1mm LARGER THAN THE VIA DIAMETER.
8) STENCIL DESIGN MAY BE CHANGED TO SUIT REQUIREMENTS OF THE DESIGNER.
   A) LASER CUT STENCIL 0.125mm (5mil) THICK. APERTURE SIZE-TO-LAND RATIO OF 1:1.
   B) THE SOLDER PASTE OPENING IN THE THERMAL PAD AREA SHOULD BE A MATRIX ARRAY OF
      SMALLER APERATURES INSTEAD OF ONE LARGE APERATURE TO CONTROL PASTE AMOUNTS.
   C) APPLY 50% TO 80% SOLDER PASTE COVERAGE IN THE PAD AREA.

TopLine®

TITLE	48-LEAD 7mm P0.5mm QFN DAISY CHAIN		
SCALE 18:1	SIZE A	DRAWING NO. 454840	REV A
DO NOT SCALE DRAWING		SHEET 4 OF 5	

PART NUMBERING SYSTEM

QFN48	T	.5	-	F	-	DE	-	D
STYLE OUTLINE	PACKAGING	PITCH		PLATING		CIRCUIT		OPTION
QUAD FLAT NO LEAD 48 PIN	T = TRAY M = TUBE E = CUT TAPE E7A = 7" REEL E13A = 13" REEL	.5 = 0.5MM		F = NiPdAu T = Sn100 Tin		DE = DAISY CHAIN ISO = ISOLATED BLANK = DUMMY		BLANK = DUMMY D = DUMMY DIE

PART NUMBER	ISOLATED	PACKAGING	RoHS Pb-FREE	MSL LEVEL	DUMMY DIE
QFN48T.5-F-DE-D	YES	JEDEC TRAY	YES	NiPdAu	YES
QFN48M.5-F-DE-D	YES	TUBE	YES	NiPdAu	YES
QFN48T.5-T-DE-D	YES	JEDEC TRAY	YES	Sn100	YES
QFN48M.5-T-DE-D	YES	TUBE	YES	Sn100	YES
QFN48T.5-F	NO	JEDEC TRAY	YES	NiPdAu	NO
QFN48M.5-F	NO	TUBE	YES	NiPdAu	NO

OTHER PART NUMBER COMBINATIONS AVAILABLE. CONTACT TOPLINE.

TopLine®

TITLE			
48-LEAD 7mm P0.5mm QFN DAISY CHAIN			
SCALE	SIZE	DRAWING NO.	REV
NONE	A	454840	A
DO NOT SCALE DRAWING		SHEET 5 OF 5	