## TOP

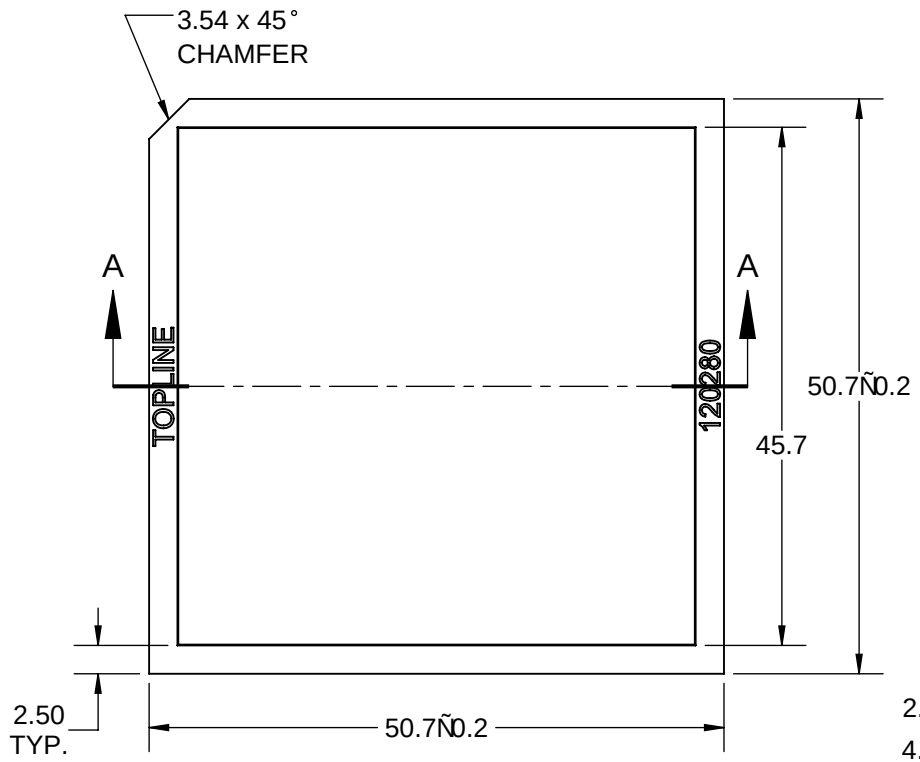


## SIDE

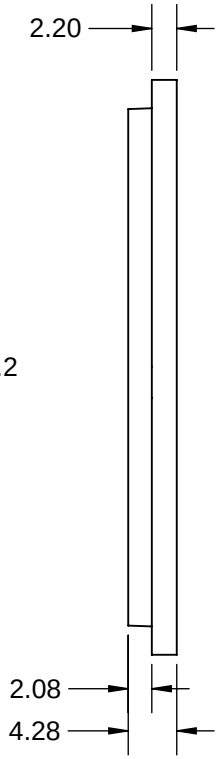


## BOTTOM

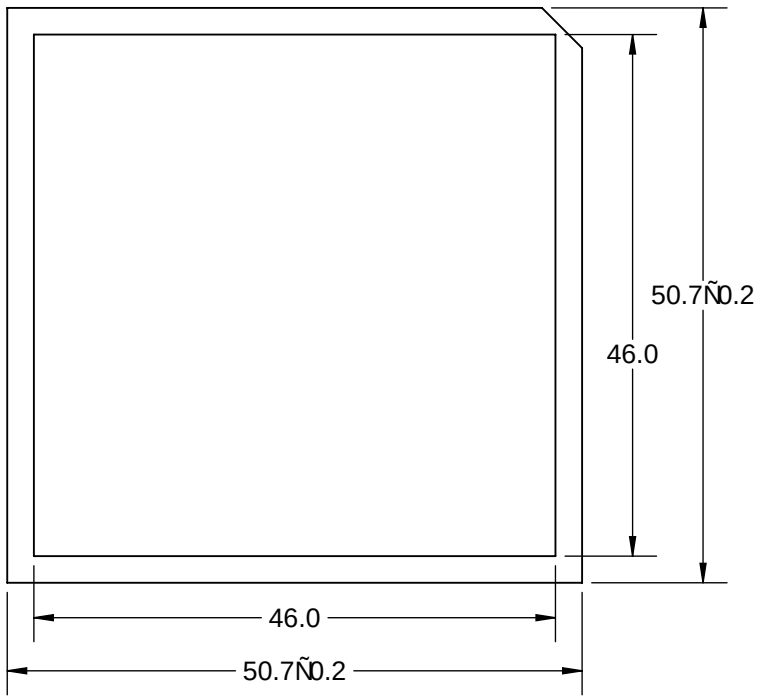


## SECTION A-A

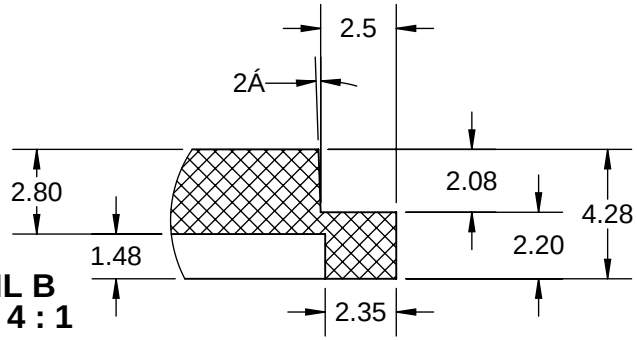


## DETAIL B
## SCALE 4 : 1

| DWG | TEMP | SURFACE RESISTIVITY |
|---|---|---|
| 120280 | 90°C | $10^5$q |

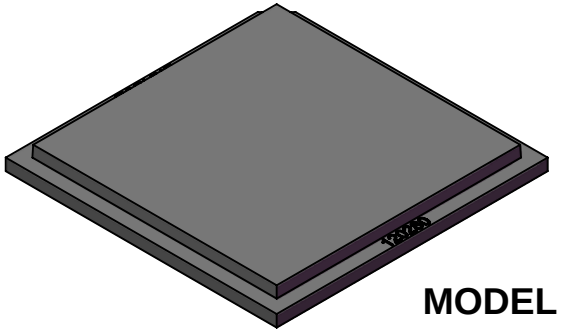

## MODEL

Notes: (Unless Otherwise Specified).
1) MATERIAL: PLASTIC, ESD SAFE.
2) DIMENSIONS: MM [inch].

| APPROVALS | | DATE | TopLine® | | | |
|---|---|---|---|---|---|---|
| DRAWN | T.Au | 3/17/2020 | | | | |
| ENG | M. Hart | 3/17/2020 | TITLE | FP2-2.80-BLACK<br>2-inch FLIP-PACK 2.80mm | | |
| MFG | | | | | | |
| QA | | | SCALE | SIZE | DRAWING NO. | REV |
| CUST | | | 3:2 | A | 120280 | A |
| REVISED | | | DO NOT SCALE DRAWING | | | SHEET 1 OF 1 |